M-90595
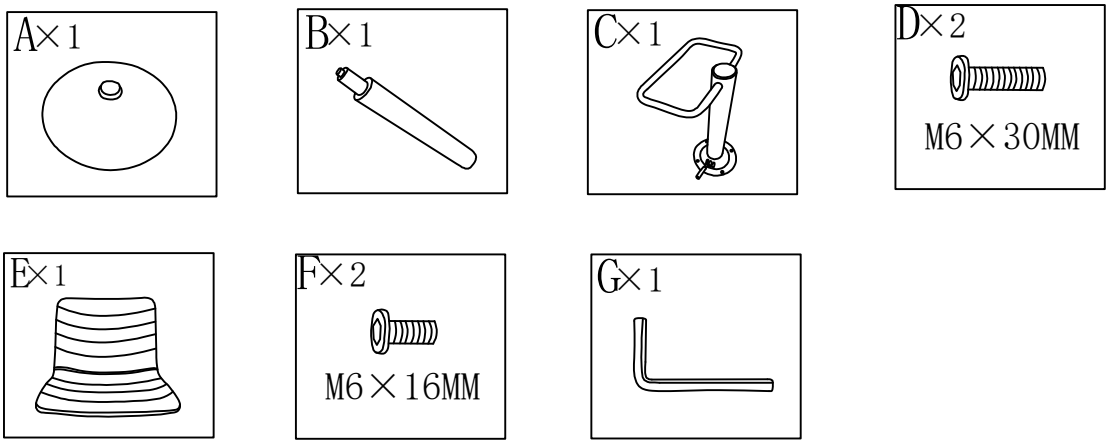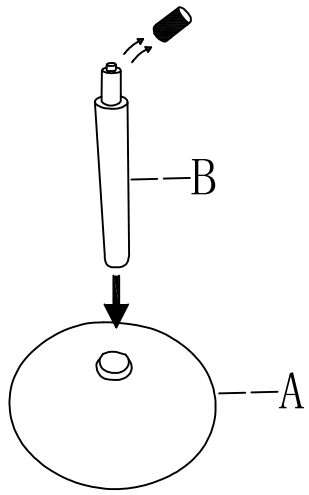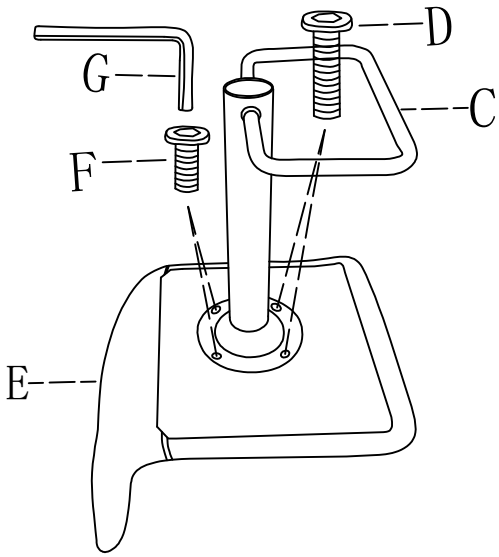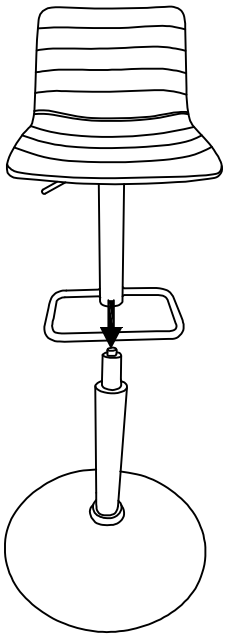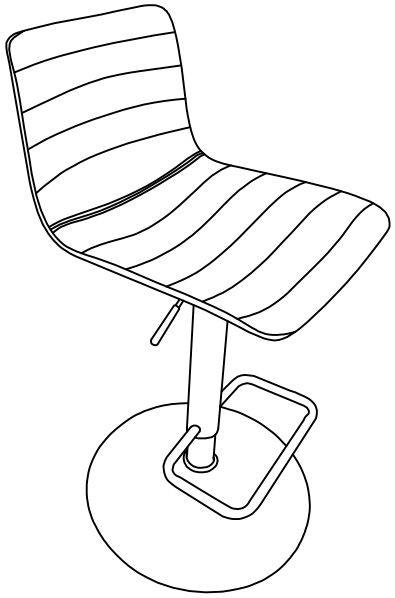
ASSEMBLY INSTRUCTIONS